查询SW-442供应商 捷多邦，专业PCB打样工厂，24小时加急出货

AMP M/A-COM

GaAs SPDT Terminated Switch DC - 3.0 GHz

M/A-COM RF & Microwave Products

Features

- Low Cost Plastic SOT-26 Package
- Low Insertion Loss <0.6 dB @ 900 MHz
- High Isolation >38 dB @ 900 MHz
- Low Power Consumption <10µA @ +3V
- Positive or Negative 2.5 to 8 V Control

Description

M/A-COM's SW-442 is a GaAs monolithic switch in a low cost SOT-26 surface mount plastic package. The SW-442 is ideally suited for applications where very low power consumption, low insertion loss, very small size and low cost are required. Typical application is in dual band systems where switching between small signal components is required such as filter banks, single band LNA's, converters etc. The SW-442 can be used in applications up to 0.25 Watts in systems such as CDMA, W-CDMA, PCS, DCS1800, GSM and other analog/digital wireless communications systems.

The SW-442 is fabricated using a mature 0.8 micron GaAs MESFET process. The process features full passivation for increased performance and reliability.

SOT-26 Plastic Package

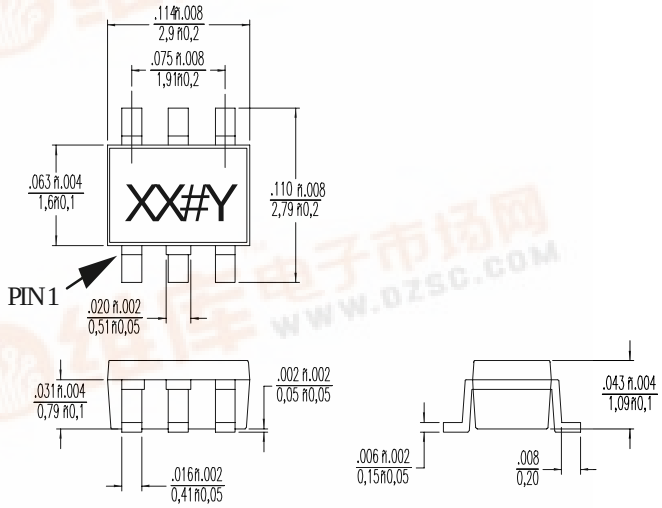

Ordering Information

Part Number	Package
SW-442 PIN	SOT-26 Plastic Package
SW-442TR	Forward Tape and Reel [1]
SW-442RTR	Reverse Tape and Reel[1]
SW-442SMB	Sample Board

1. Reference Application Note M513 for reel size information.

Electrical Specifications T_A = 25°C

Parameter	Test Conditions	Units	Min.	Typ.	Max.
Insertion Loss	DC - 1 GHz 1- 2 GHz 2 - 3 GHz	dB dB dB		0.5 0.8 1.1	0.7 1.0 1.25
Isolation	DC - 1 GHz 1 - 2 GHz 2 - 3 GHz	dB dB dB	36 25 21	38 28 22	
VSWR	DC - 2 GHz 2 - 3 GHz			1.4:1 1.6:1	1.5:1 1.7:1
P_{1dB} (2.7V supply)	500 MHz - 3 GHz	dBm		24	
P_{1dB} (5V supply)	500 MHz - 3 GHz	dBm		28	
IP_2 (2.7V supply)	2-Tone 900 MHz, 5 MHz spacing, 10 dBm each tone	dBm		80	
IP_3 (2.7V supply)	2-Tone 900 MHz, 5 MHz spacing, 10 dBm each tone	dBm		50	
T_{rise}, T_{fall} T_{on}, T_{off} Transients	10% to 90% RF, 90% to 10% RF 50% Control to 90% RF, Control to 10% RF In-Band	ns ns mV		40 60 10	
Gate Leakage	V_{CTL} = 2.5V	µA		6	15

找PDF 维库一下 pdf.dzsc.com

M/A-COM Division of AMP Incorporated ■ North America: Tel. (800) 366-2266, Fax (800) 618-8883 ■ Asia/Pacific: Tel.+81 44 844 8296, Fax +81 44 844 8298
■ Europe: Tel. +44 (1344) 869 595, Fax+44 (1344) 300 020

Connecting at a HIGHER

Absolute Maximum Ratings[1]

Parameter	Absolute Maximum
Input Power (0.5 - 3.0 GHz)	
3V Control	+30 dBm
5V Control	+33 dBm
Operating Voltage	+8.5 Volts
Operating Temperature	-40°C to +85°C
Storage Temperature	-65°C to +150°C

1. Exceeding any one or combination of these limits may cause permanent damage.

Truth Table

Mode (Control)	V1	V2	RFC - RF1	RFC - RF2
Positive[1]	0±0.2V	+2.5 to +8V	On	Off
	+2.5 to +8V	0±0.2V	Off	On
Negative[2]	0±0.2V	-2.5V to -8V	Off	On
	-2.5V to -8V	0±0.2V	On	Off

1. External DC blocking capacitors are required on all RF ports and GND. GND capacitors can be used with postive control voltage to resonate lead inductance for improved isolation.
2. If negative control is used, DC blocking capacitors and GND capacitors are not required.

PIN Configuration

PIN No.	Function	Description
1	RF1	RF in/out
2	GND	RF Ground
3	RF2	RF in/out
4	V2	V Control 2
5	RFC	RF COMMON
6	V1	V Control 1

Functional Schematic
Positive Control Voltage

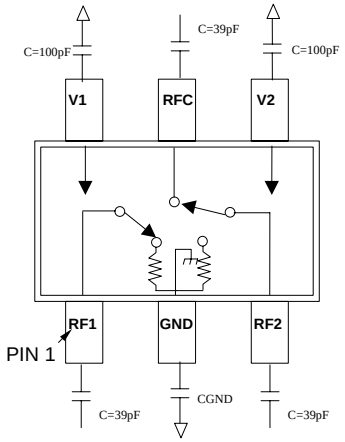

Functional Schematic
Negative Control Voltage

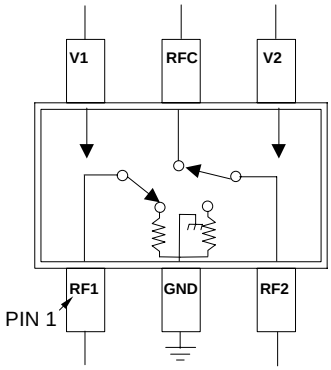

Handling Procedures

The following precautions should be observed to avoid damage:

Static Sensitivity

Gallium Arsenide Integrated Circuits are ESD sensitive and can be damaged by static electricity. Proper ESD techniques should be used when handling these devices.

M/A-COM Division of AMP Incorporated ■ North America: Tel. (800) 366-2266, Fax (800) 618-8883 ■ Asia/Pacific: Tel.+81 44 844 8296, Fax +81 44 844 8298
■ Europe: Tel. +44 (1344) 869 595, Fax+44 (1344) 300 020

Connecting at a HIGHER

Typical Performance Curves

Output VSWR vs. Frequency over Temperature

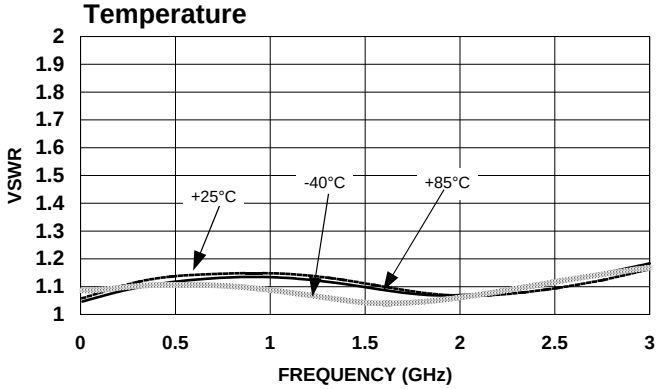

Input VSWR vs. Frequency over Temperature

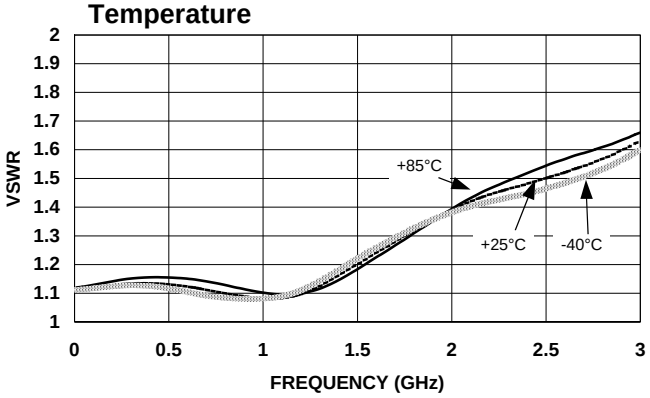

Isolation Loss vs. Frequency over Temperature (Postive Control)

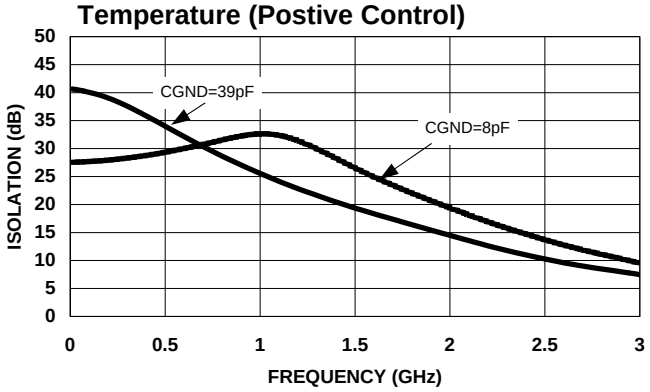

Isolation Loss vs. Frequency over Temperature (Negative Control)

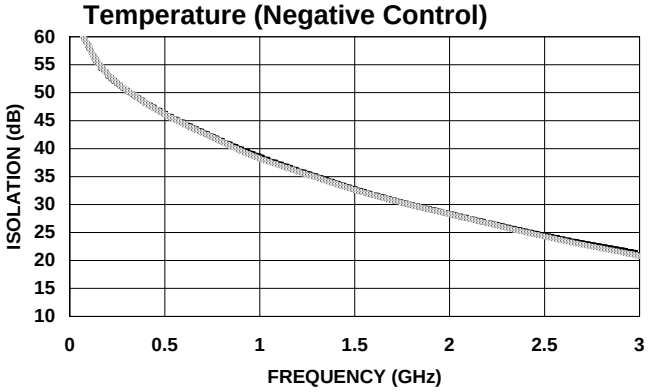

Insertion Loss vs. Frequency over Temperature (Postive Control)

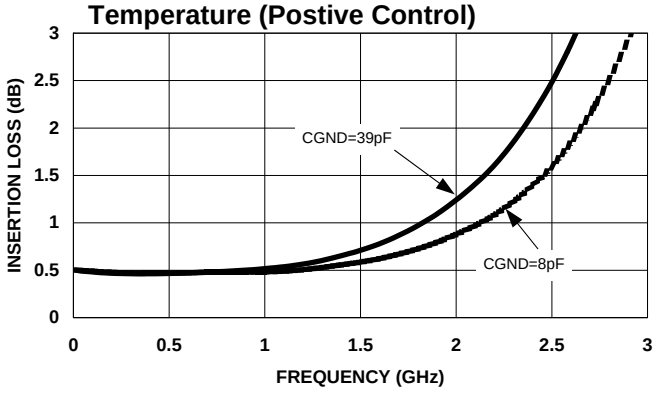

Insertion Loss vs. Frequency over Temperature (Negative Control)

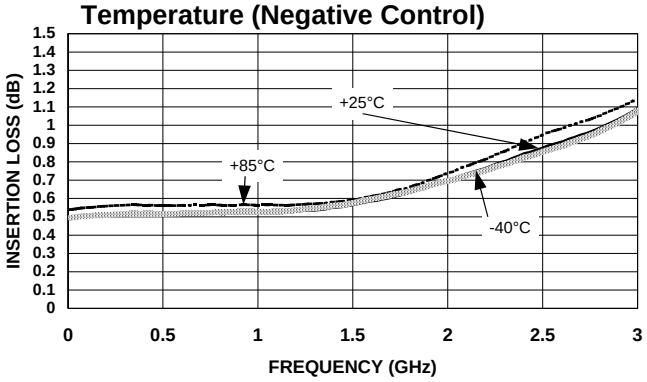

M/A-COM Division of AMP Incorporated ■ North America: Tel. (800) 366-2266, Fax (800) 618-8883 ■ Asia/Pacific: Tel.+81 44 844 8296, Fax +81 44 844 8298
■ Europe: Tel. +44 (1344) 869 595, Fax+44 (1344) 300 020

Connecting at a HIGHER